# Front

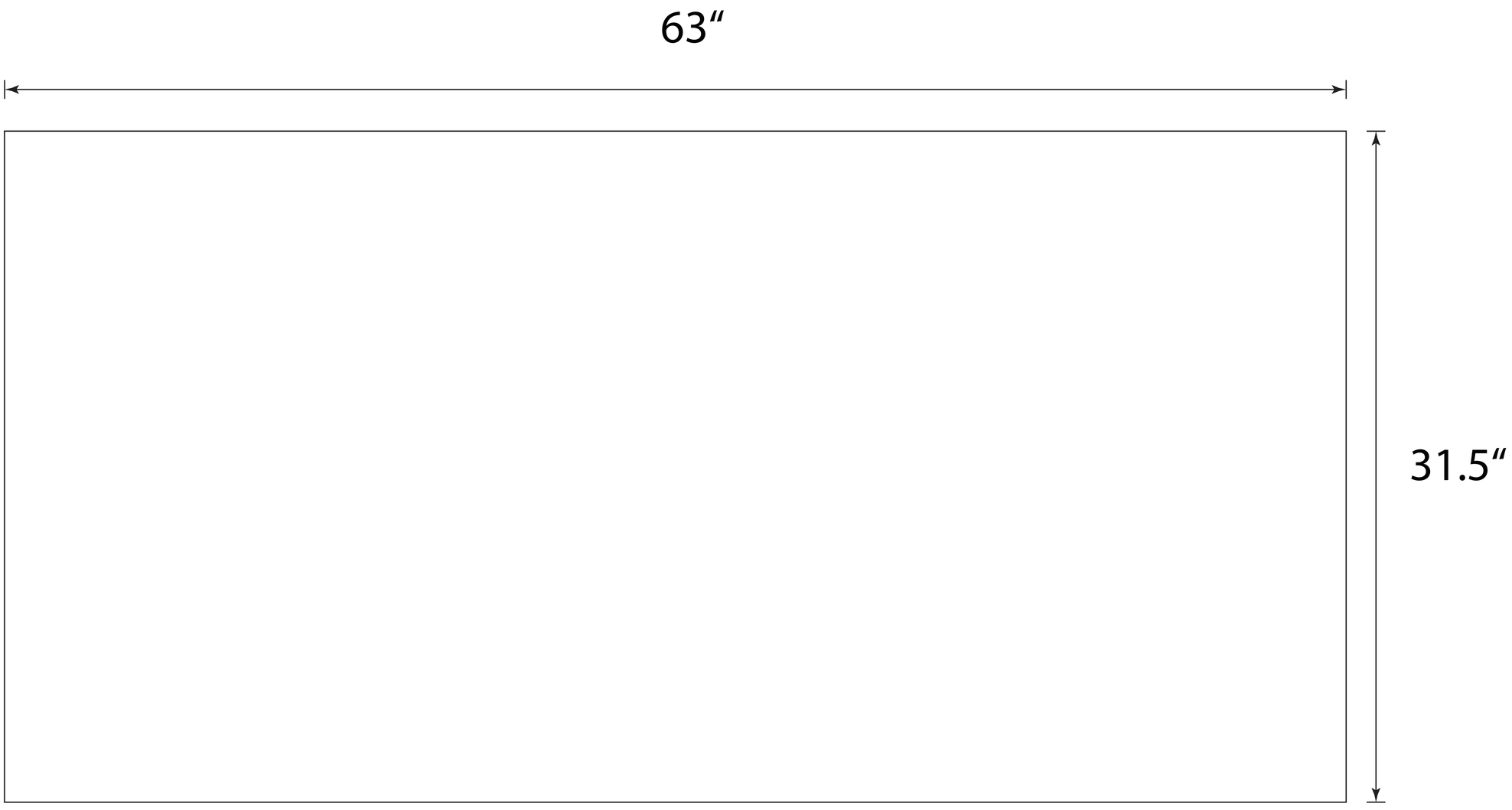


# Back

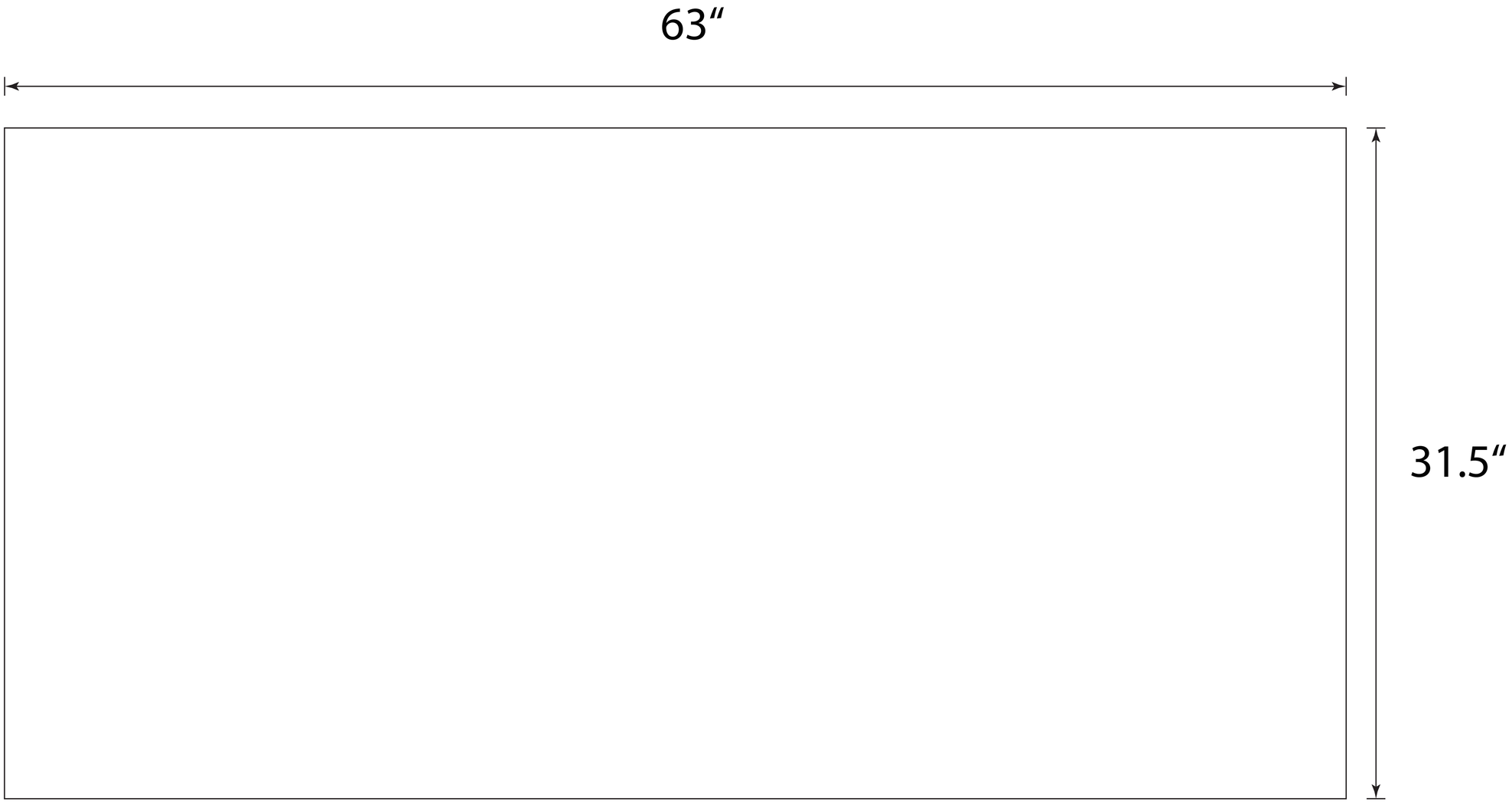

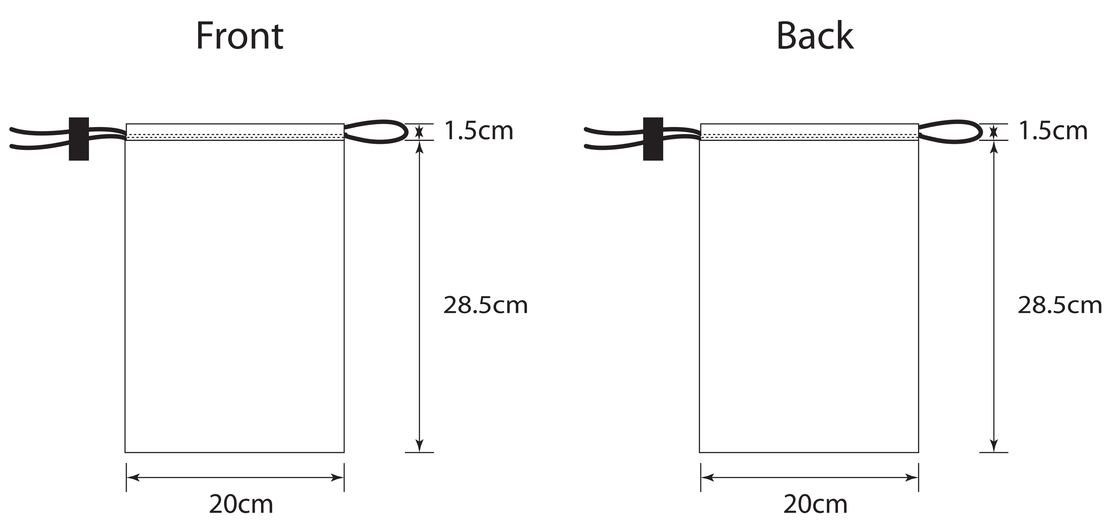
# M