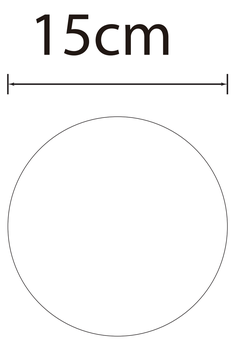

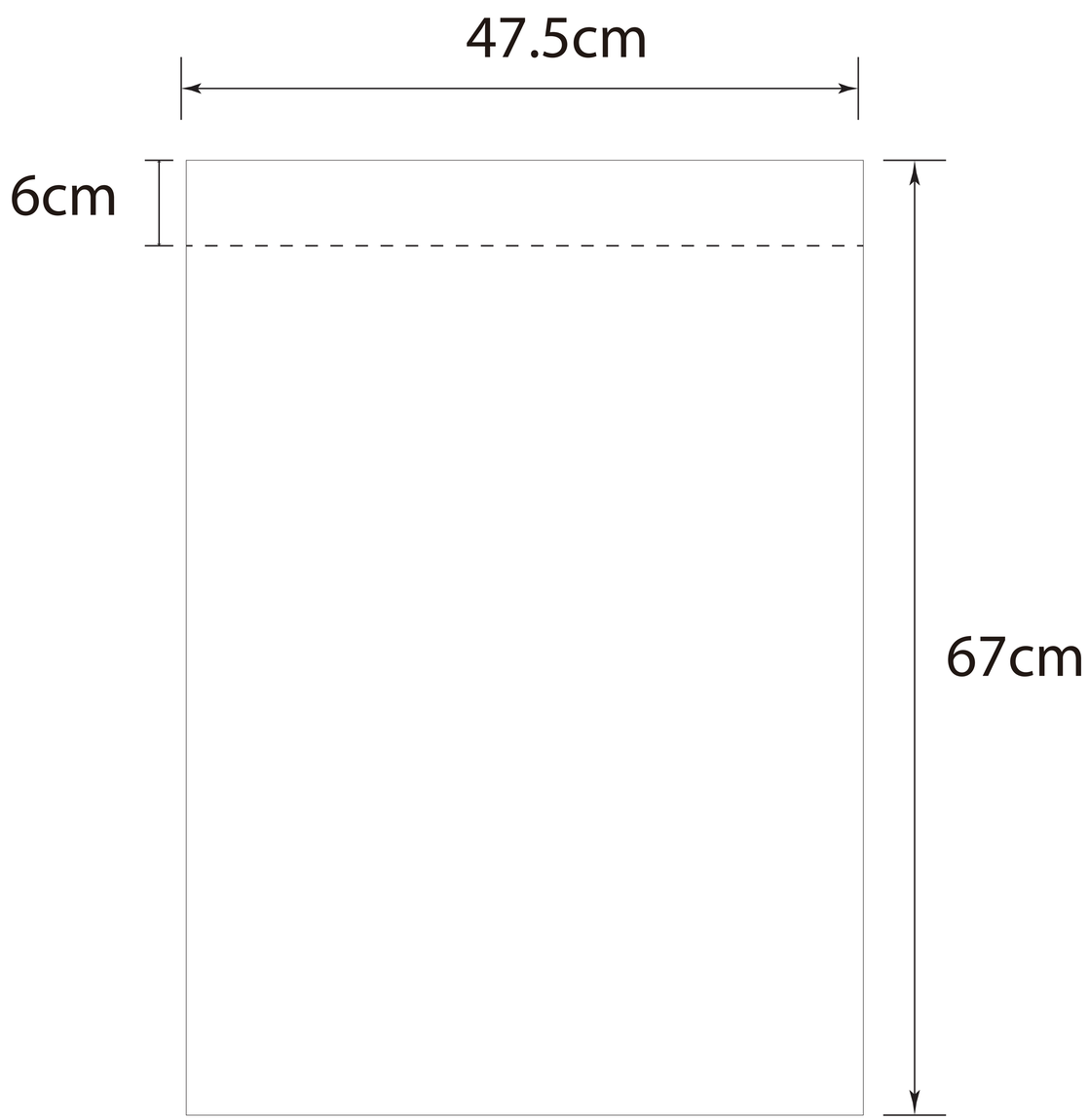

Dark color

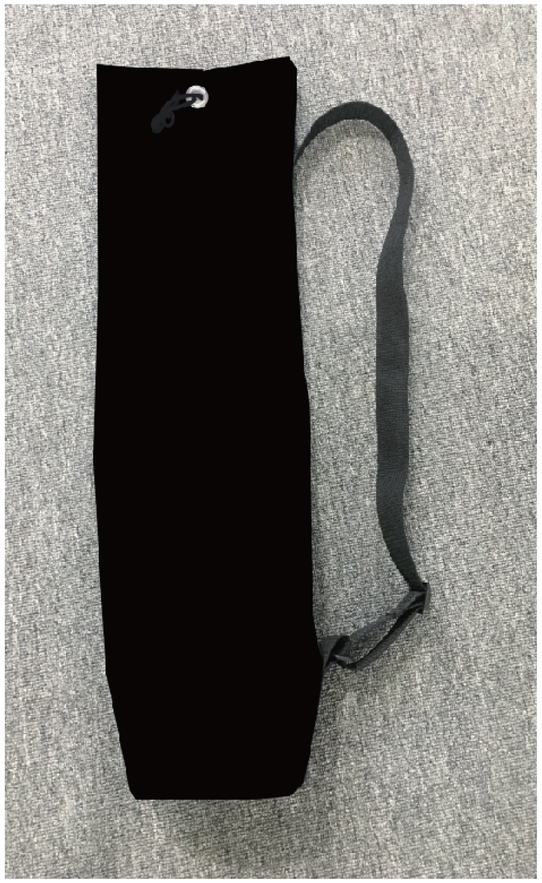

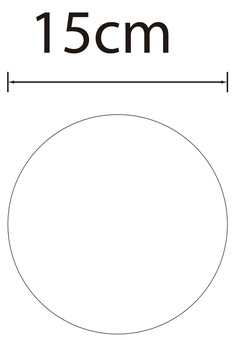

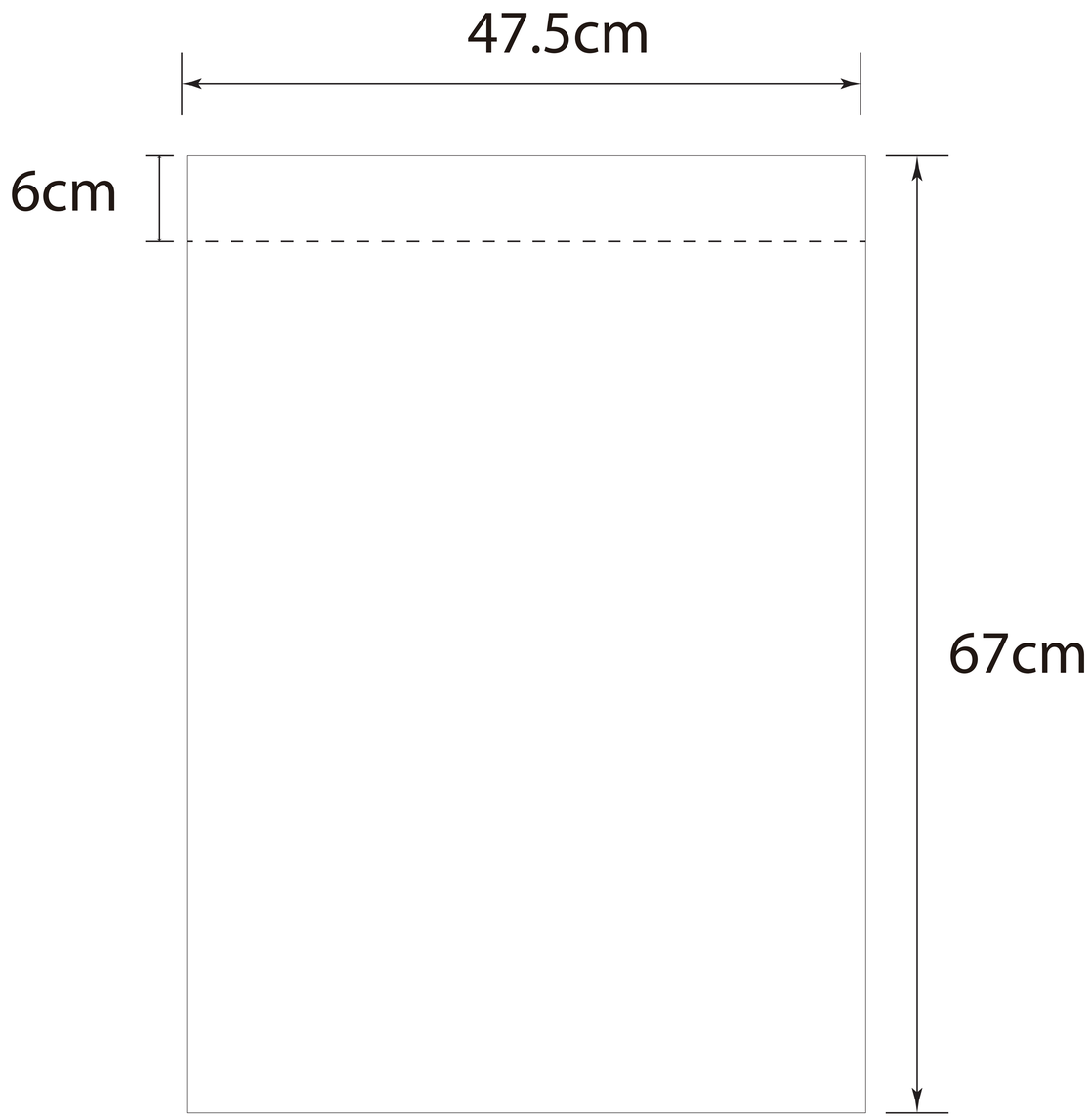
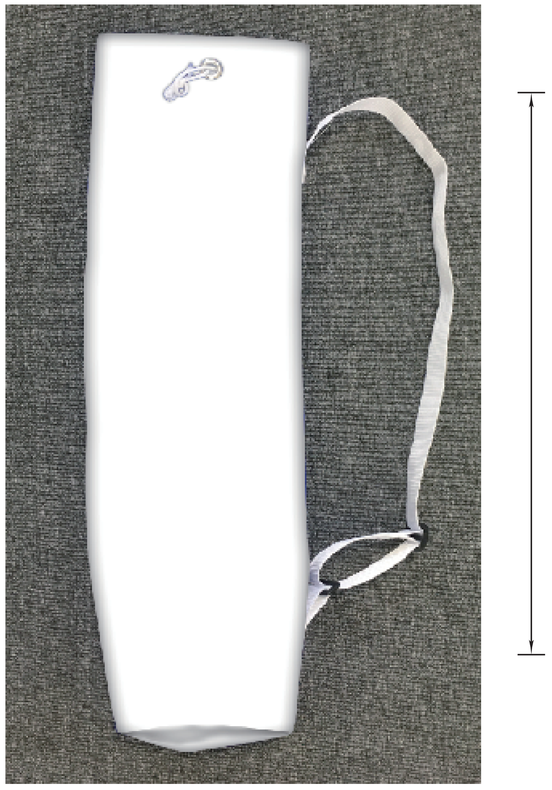
Light color